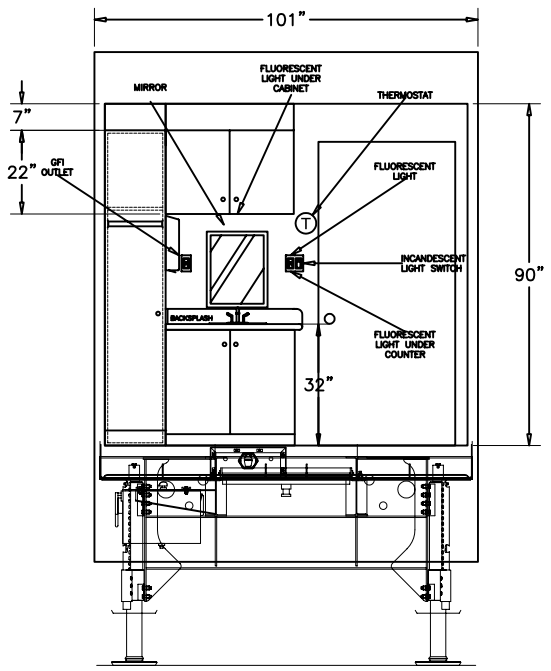

AA

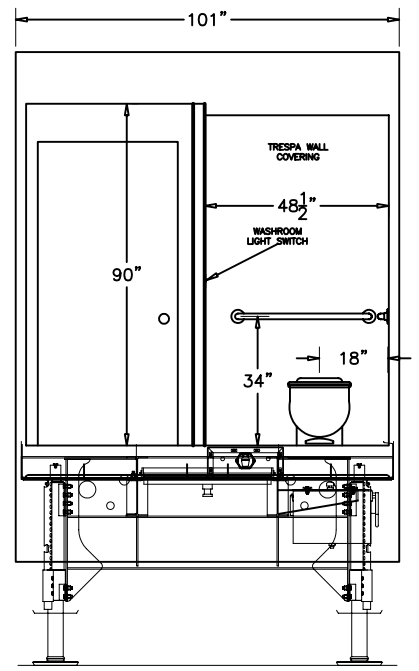

BB

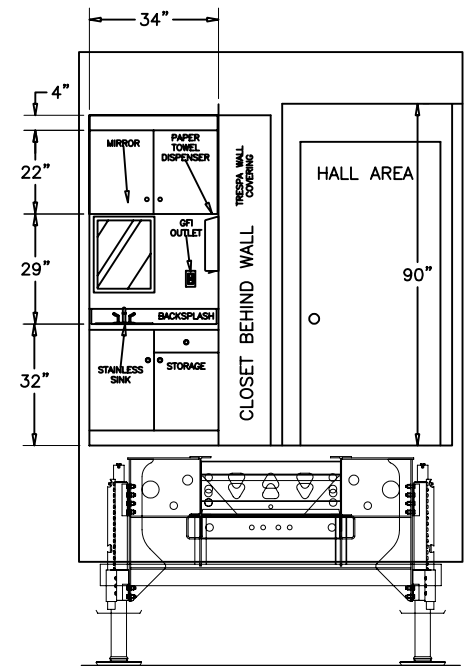

CC

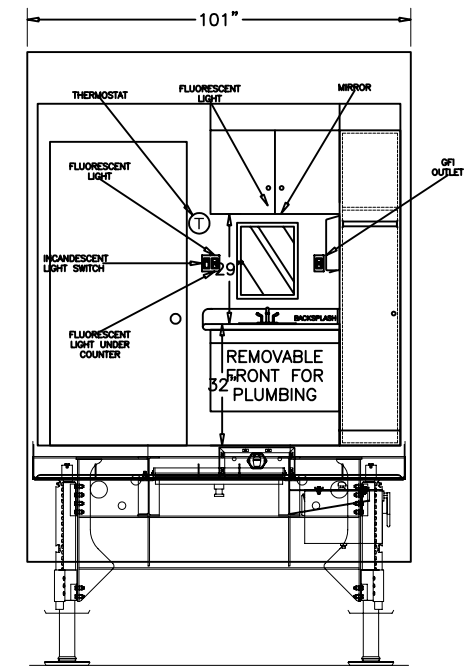

DD

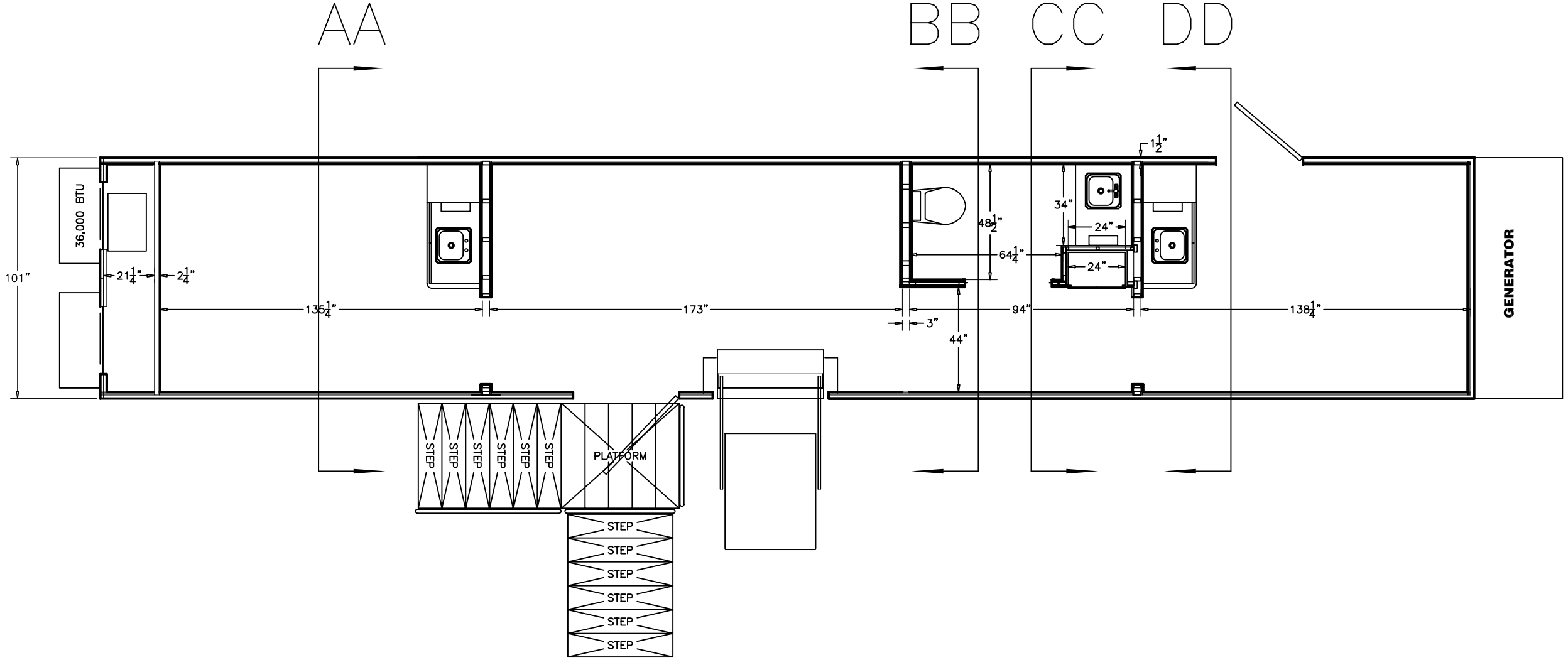

#	Revision Description
-	

Van Change Request #(VCR): -
VCR Approval: - Date: -
Revised By: - Date: -

Project Engineer: -
Drawn By: -
Date Drawn: -
Approved By: -
Approval Date: -
Scale: NTS

CALUTECH
MOBILE SOLUTIONS INC.
"Driving Mobile Technology Forward"
3550 179th. Street, Unit "C" - Hammond, IN. 46323
Phone: 219-845-1695 Fax: 219-845-1844
Web Address: www.calutechmobiles.com

TITLE
Elevation & Section Views
Detail & Assembly
SYSTEM
Sleep Apnea
CUSTOMER
Munson Medical

JOB NUMBER
00-0000
DRAWING SERIES
CP-10234
DRAWING EXT.
A-03
DRAWING REVISION
00